

VOIP KNSP-13MT-IP-Y Waterproof Telephone

DESCRIPTION ITEM NO.

1. Robust aluminium alloy die-cast body, Vandal & tamper-resistant hardware, easy Installation.
2. Waterproof rating IP66 dust proof.
3. Full keypad with memory, 2 button programmable telephone, support free dial.
4. DC input overvoltage overcurrent protection and RJ 45 surge protection.
5. Without Heavy Duty handset .
6. Silicon keypad keep waterproof and dusty proof.
7. Door cover: orient automatically and good self - closing, convenient for use.
8. Temperature range from -40 degree to +70 degree.
9. Support echo cancellation.
10. Remote software upgrade, configuration and monitoring.
11. Powder coated in UV stabilized polyester finish.
12. Application: Tunnel, metro, railway, LRT, speedway, marine, ship,offshore, mine, power plant , bridge etc.



SPECIFICATION

VoIP SIP2.0 telephone DTMF dialing
MTBF:100000hours MTTR: 2 hours
Hot-line (maximum length of each number is 16 digits)
Communication: Full duplex 2-way hands-free communication
Call Control Signaling:VOIP SIP Info(DTMF), RFC 2833(DTMF)
Power:Power over Ethernet, IEEE802.3af, Class 0
Local power, 12VDc,Idle 2W, Max 10W
Auxiliary Contacts: (option)
1 Aux Output, dry contact
Contact Ratings. Load: Resistive load
Rated load:0.3 A at 125 VAC; 1 A at 30 VDC
Rated carry current:1A
Max.switching voltage:125 VAC,30VDC
Max.switching current:1A

Audio Codes:G.711, G.723, G726,G.729
Network:10/100 BaseTX Ethernet, RJ45 connectors, Cat5e or better
IP Protocols:IPv4, TCP, UDP, RTP, DHCP, SIP
1 x LAN Protocols:Power over Ethernet(PoE,802.3af).
2 x WLAN(IEEE 802.3af), Network Access Control(IEEE 802.1x),STP(IEEE 802.1d), RSTP(IEEE 802.1d-2004)
Programming:Non-volatile flash memory programming and configuration through Web GUI
Management and Operation:DHCP and static IP, remote automatic software upgrade, centralized monitoring
Echo cancellation

Order information:

Model number	Power Supply	Item Number
KNSP-13MT-IP-Y_AD	DC12V 1A	SP0130052
KNSP-13MT-IP-Y_P	POE	SP0130022
KNSP-13MT-IP-Y_ADP	DC12V 1A +POE	SP0130092

*AD---Adapter UL (Input : AC110~240V , Output : DC12V 1A)

*P---POE

CERTIFICATION

Australian communications:AS/CA S004
Australian Equipment-safety: AS/NZS 60950.1:2015
RCM: AS/NZS CISPR 32
EMC:EN55032, EN55024,EN61000-3-2.

INSTALLATION

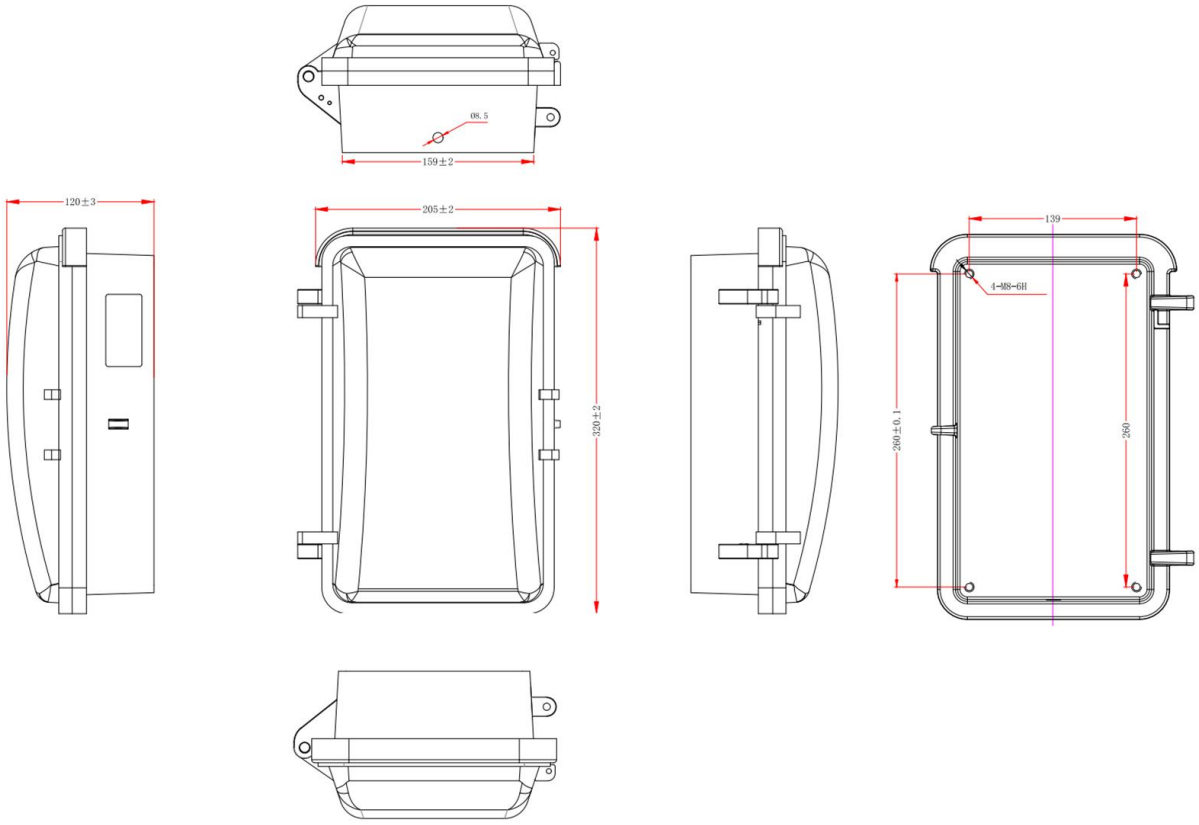

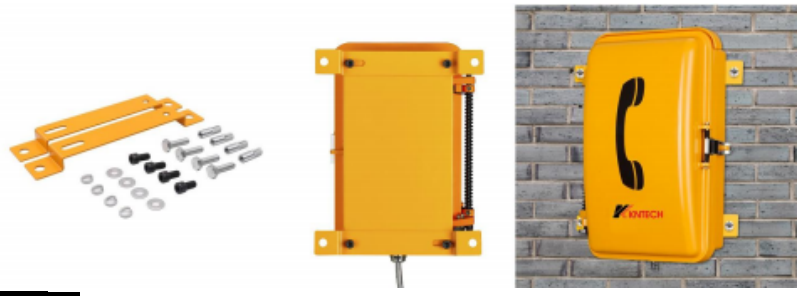

PACKAGING

Unit size:320 *205*120mm Unit: N.W:4.74KG

1pcs packing box size: 439 *277 *191mm Unit N.W:5.7KG

6pcs in 1 outer Carton box: size: 730*390*340mm N.W:35.7KG



KNTECH
HONGKONG KOON TECHNOLOGY LTD
TEL:0086755 29790158/27448753 Fax:0086755 29790278
Email:marketing@koontech.com www.koontech.com